K'ELECTRIC
WE CONNECT TO PROTECT
K'electric GmbH
Carl-Benz-Str. 7
D 95448 Bayreuth
Fon +49 (0) 921 1512678-0
Fax +49 (0) 921 1512678-20
E-mail: office@k-electric-gmbh.de
www.k-electric-gmbh.de

DIN rail 35mm

KE-N80

4 Quardants MID certified Active and Reactive Energy Meter for indoor measuring of a three phase AC electrical installation, with 8 digits LCD, 2 Tariffs and 2 S0 pulse outputs (compliant to IEC 62053-31) proportional to Active and Reactive Imported Energies

Width of 72 mm / 4TE
8 digits green backlighted LCD
Direct connection
Active Energy Accuracy: Class B (1%) according to EN 50470-3
Reactive Energy Accuracy: Class 2 according to EN 62053-23
Phase Sequence Error detection with Display Error Message
Operating current range (Ist ... Imax) = 0.015 ... 80 A
Imported and Exported Active and Reactive Energy Registers (ΣL, L1, L2, L3), under tariffs T1 and T2, are readable on display.
Energy Registers are not resettable
Instantaneous Active and Reactive, Imported and Exported Power measures are readable on display
Pulse output 1 for active imported Energy 500imp/kWh
Pulse output 2 for reactive imported Energy 500imp/kvarh
Sealable terminal covers
Made in EU
Infrared Interface connectable to several types of Communication Modules: M-BUS; Modbus RTU; LAN/TCP, KNX; SD-Karte

Item:	kg/pc	unit	Item No.
KE-N80 three phase Energy Meter for direct connection 80A	0,424	1	19 5551

K'ELECTRIC

Overview of the measured parameters

Measured parameters - Display o
Measured parameters - Remote reading (M-Bus) x

Voltage	L1,L2,L3		x
	L1-L2; L2-L3; L3-L1		x
Current	L1,L2,L3		x
	N		x
Power factor	L1,L2,L3		x
	∑L		x
Frequency			x
Active power	L1,L2,L3		x
	∑L	o	x
Reactive power	L1,L2,L3		x
	∑L	o	x
Apparent power	L1,L2,L3		x
	∑L		x
Active power (receive)	L1,L2,L3	o	x
	Tariff 1 and 2 / ∑L	o	x
Active power (delivery)	L1,L2,L3	o	x
	Tariff 1 and 2 / ∑L	o	x
Reactive power (receive)	L1,L2,L3	o	x
	Tariff 1 and 2 / ∑L	o	x
Reactive power (delivery)	L1,L2,L3	o	x
	Tariff 1 and 2 / ∑L	o	x

Approvals

EN 50470-1, EN 50470-3,
EN 62053-23, EN 62053-31

Operating features:

Connection:	to single/three phase network	2-4 wires
Storage of energy values and configuration:	internal flash memory	yes
Tariff:	for active and reactive energy	T1 and T2

Electrical data:

Type of connection:		direct connection 80A
Reference Voltage U_n:	Line to Neutral	230V AC
	Line to Line	400V AC
Operating Supply Voltage range:		110..276V AC / 190..480V AC
Maximum Power Dissipation:	Voltage circuit	< 2VA / (0,6W)
	Current circuit I_{max}	< 0,7VA
Voltage Input Waveform:		AC
Reference Current:	I_{ref}	5A
Minimum Current:	I_{min}	0,25A
Maximum Current::	I_{max}	80A
Starting current:	I_{st}	0,015A
Reference Frequency:		50 Hz
Accuracy Class (according EN50470-3):		Klasse B
Beglaubigte Messgrößen:		→kWh T1; ←kWh T1 →kWh T2; ←kWh T2

Overload capability:

Voltage:	continuous; phase/phase	480V AC
	1 second: phase/phase	800V AC
	continuous; phase/N	276V AC
	1 second: phase/N	300V AC
Current:	continuous	80A
	Temporary 10ms	2400A

Safety:

Protection class:	class II
AC voltage test (EN 50470-3, 7.2):	4kV
Degree of pollution:	2
Housing material flame resistance:	UL94 V0
Safety-sealing between upper and lower husing part: **(mod. KE-N80)**	yes

Pulse Outputs: (S0 signals acc. to IEC 62053-31)

Pulse Output 1:	(→) kWh	Active power (receive)
Pulse Output 2:	(→) kvarh	Reactive power (receive)
Pulse Rate:		500 imp/kWh - imp/kvarh
Pulse ON duration:		50 ± 2%
Operating voltage:	min - max	5 ... 33VAC (5 ... 70VDC)
Pulse ON maximum current:		90mA
Pulse OFF leakage current:		1µA
Insulation class:		SELV

Optical Interface (metrological LED):
Front mounted red LED (meter constant) proportional to active imp/exp Energy (←)kWh(→)1000 imp/kWh

Display features:

Display type:	LCD backlighted	6.2 +3
	Energy digits dimensions	6 x 3mm
Active Energy:	6 digits + 2 decimal digits	0.01...999999.99 (kWh)
Reactive Energy:	6 digits + 2 decimal digits	0.01...999999.99 (kvarh)
Instantaneous Reactive Power (← and →)	3 digits	0...999 (MW; kW, W)
Instantaneous Reactive Power (← und →)	3 digits	0...999 (Mvar; kvar, var)
Power Bargraph:	10 segments	0% - 10% - 20%...-100%
Running Tariff:	1 digit	T1 or T2
Display refresh period:		1 seconds

Connection terminals:

Screwdriver for mains terminals:		Pozidriv PZ2
Screwdriver for tariff and communication terminals:		slotted head 0,8 x 3,5mm
Terminal capacity main current paths:	solid wire	1....35mm²
	stranded wire with sleeve	1....35mm²
Terminal capacity for tariff and communication:	solid	1....4mm²
	stranded wire with sleeve	1....2,5mm²

Mechanical data:

Housing:		DIN 43880	4 modules
Mounting:		EN 60715	35mm DIN-rail
Weight:			424g
Temperature range:		storage	-25...+70°C
		operating	-25...+55°C
Mechanical environment:			M1
Electromagnetic environment:			E2
Installation:		Indoor	ja
Altitude:	:	max.	<2000m
Humidity:	yearly average, not condensing		<75%
	on 30 days per year (not condensing)		<95%
IP rating:			IP51* / IP20

* For the installation in a cabinet at leastwith IP51 protection

---

Dimensions:

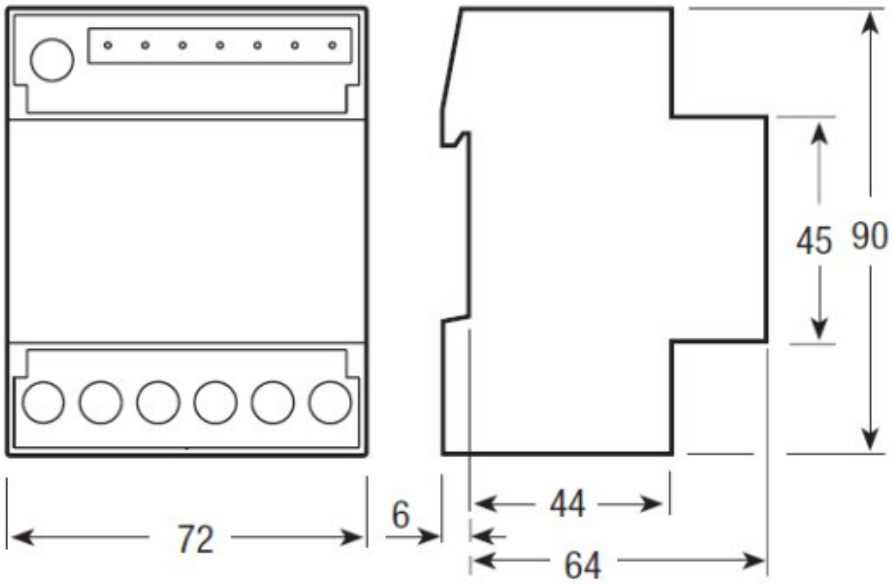

Wiring diagram KE-N-80:

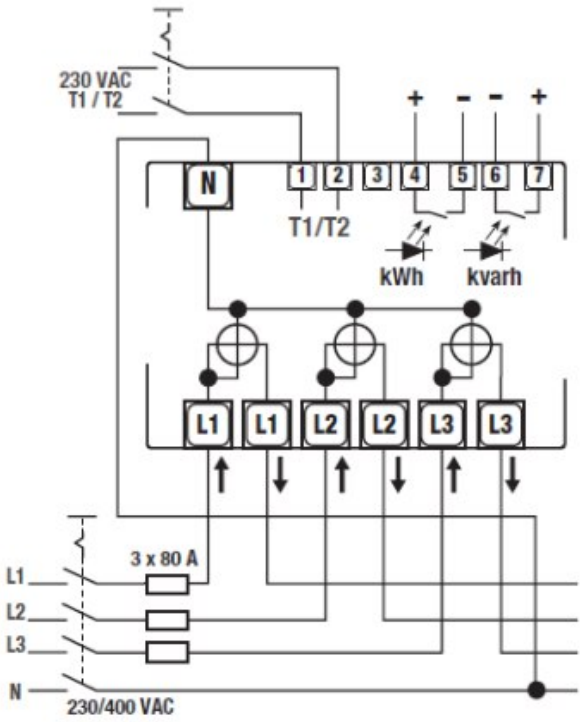

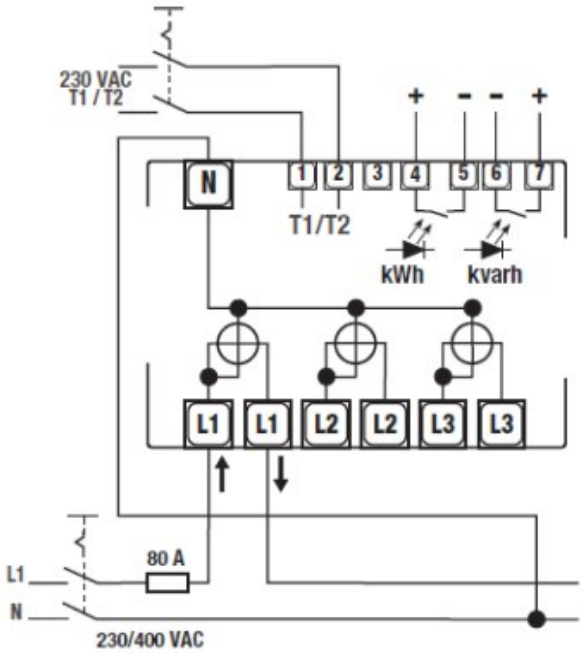

Fittings:

		kg/pc	Width	Item No.
	KE-N M-BUS MODULE	0,1	1 TE	195580
	KE-N Mod-Bus RTU Module	0,1	1 TE	195581
	KE-N Mod-Bus TCP/IP Module	0,15	2 TE	195582
	KE-N KNX Module	0,1	1 TE	195583
	KE-N SD Karten Module (associated power brick on page 7)	0,1	1 TE	195584

	kg/pc	Width	Item No.
Power brick for SD-Card-Module (230VAC/12VDC)	0,1	1 TE	195585

	Width	Item No.
M-Bus LAN Server	4 TE	195700

LAN Server up to 30 KE M-Bus electric meters. Internal memory = 2 Gb.
Web-based Server, which makes possible the easy reading via LAN/WLAN.